FORM MS–3745–12/21/2006

FILE IN SECT. 2 OF SERVICE MANUAL

613700

Illustrated Parts List

Model Series

613700

TYPE NUMBERS
0110.

TABLE OF CONTENTS

Air Cleaner 6
Alternator 7
Blower Housing 5
Camshaft 2
Carburetor 4
Carburetor Overhaul Kit 4
Controls 2/6
Crankcase Cover/Sump 3
Crankshaft 2
Cylinder 2
Cylinder Head/Valves 3
Electric Starter 7
Electrical 7
Engine/Valve Gasket Sets 2/3
Flywheel 5
Fuel Supply 7
Ignition 7
Lubrication 3
Pistons/Rings/Connecting Rods 2
Springs 2

PRINTED IN U.S.A.

BRIGGS & STRATTON ®

COPYRIGHT by BRIGGS & STRATTON CORPORATION
All rights reserved. No part of this material may be reproduced or transmitted, in any form or by any means, electronic or mechanical, including photocopying, recording or by any information storage and retrieval system, without permission in writing from Briggs & Stratton Corporation.

613700

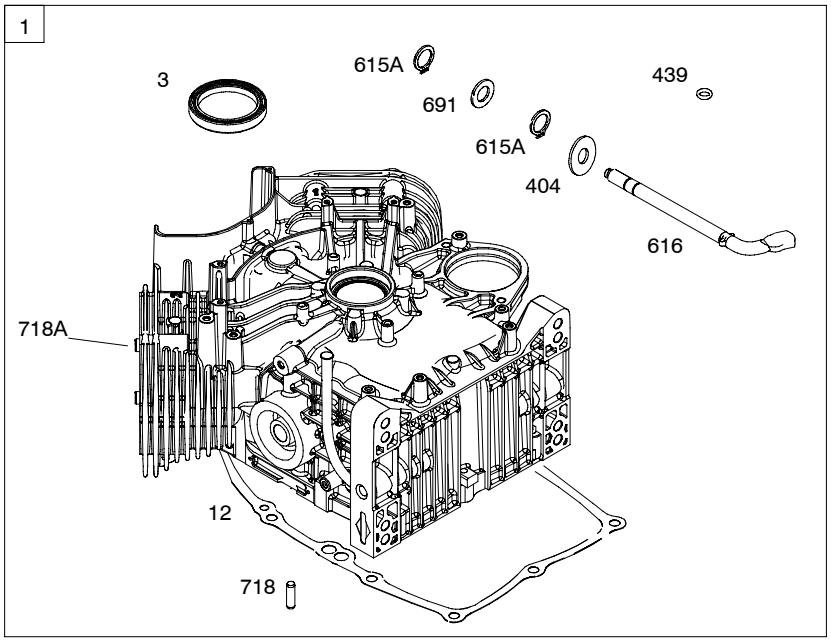

1058 OPERATOR'S MANUAL

1036 EMISSIONS LABEL

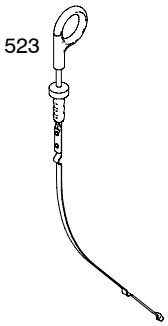

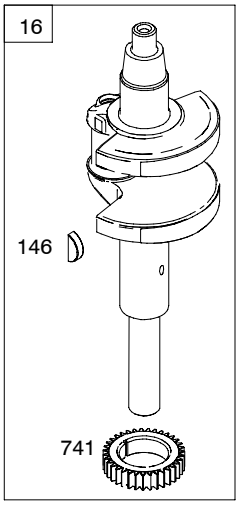

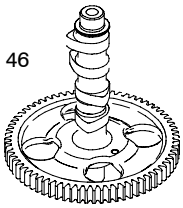

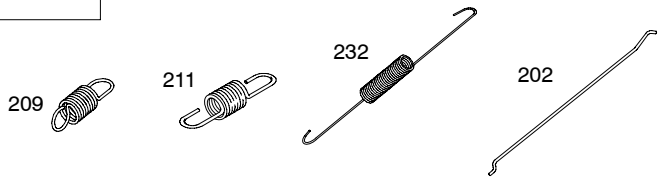

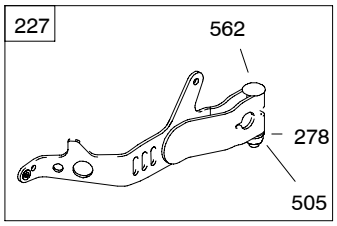

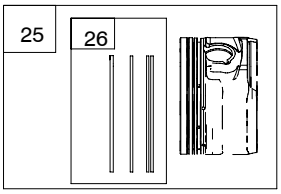

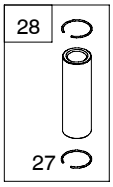

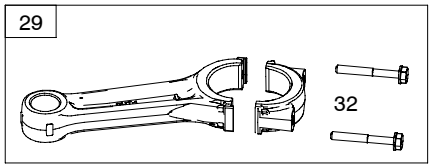

358 ENGINE GASKET SET

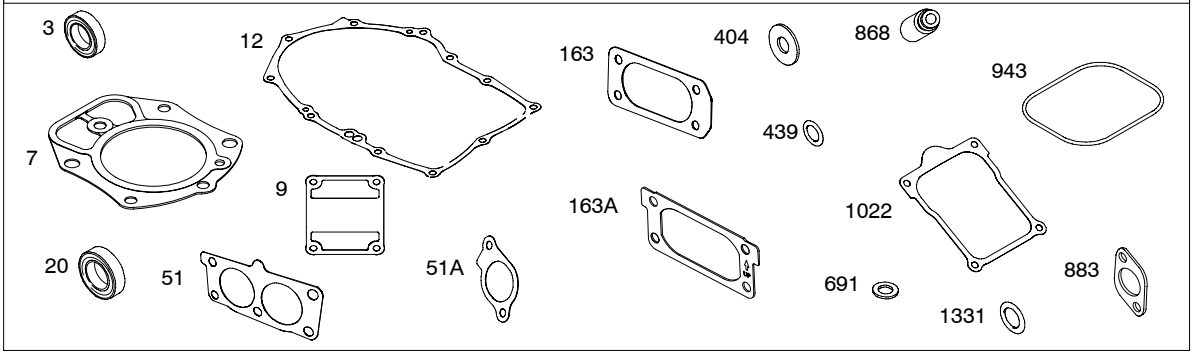

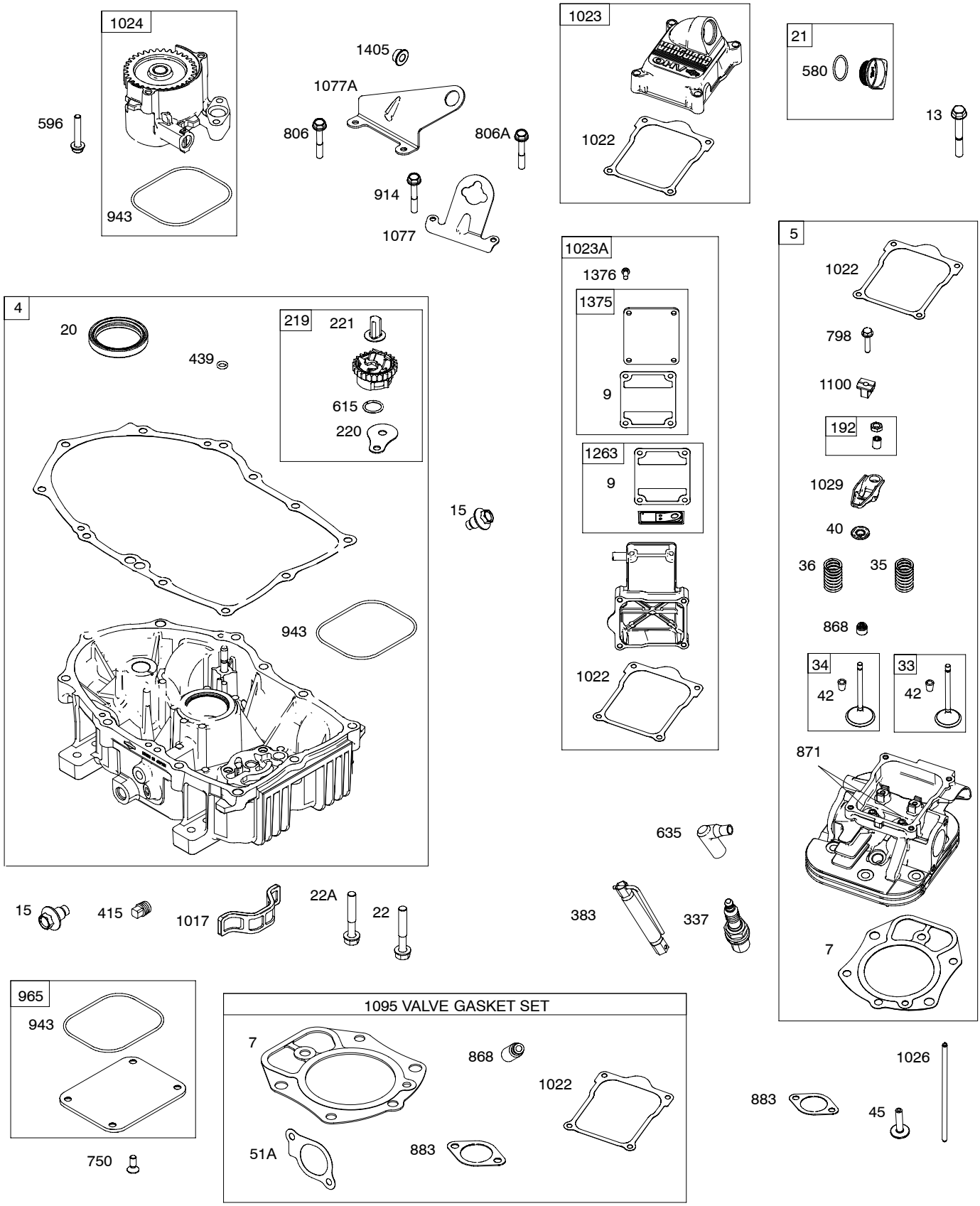
1024
596
943
1405
1077A
806
806A
914
1077
1023
1022
21
580
13
1023A
1376
1375
9
1263
9
1022
5
1022
798
1100
192
1029
40
36
35
868
34
42
33
42
871
7
4
20
439
219
221
615
220
15
943
15
415
1017
22A
22
635
383
337
965
943
750
1095 VALVE GASKET SET
7
868
1022
51A
883
883
45
1026

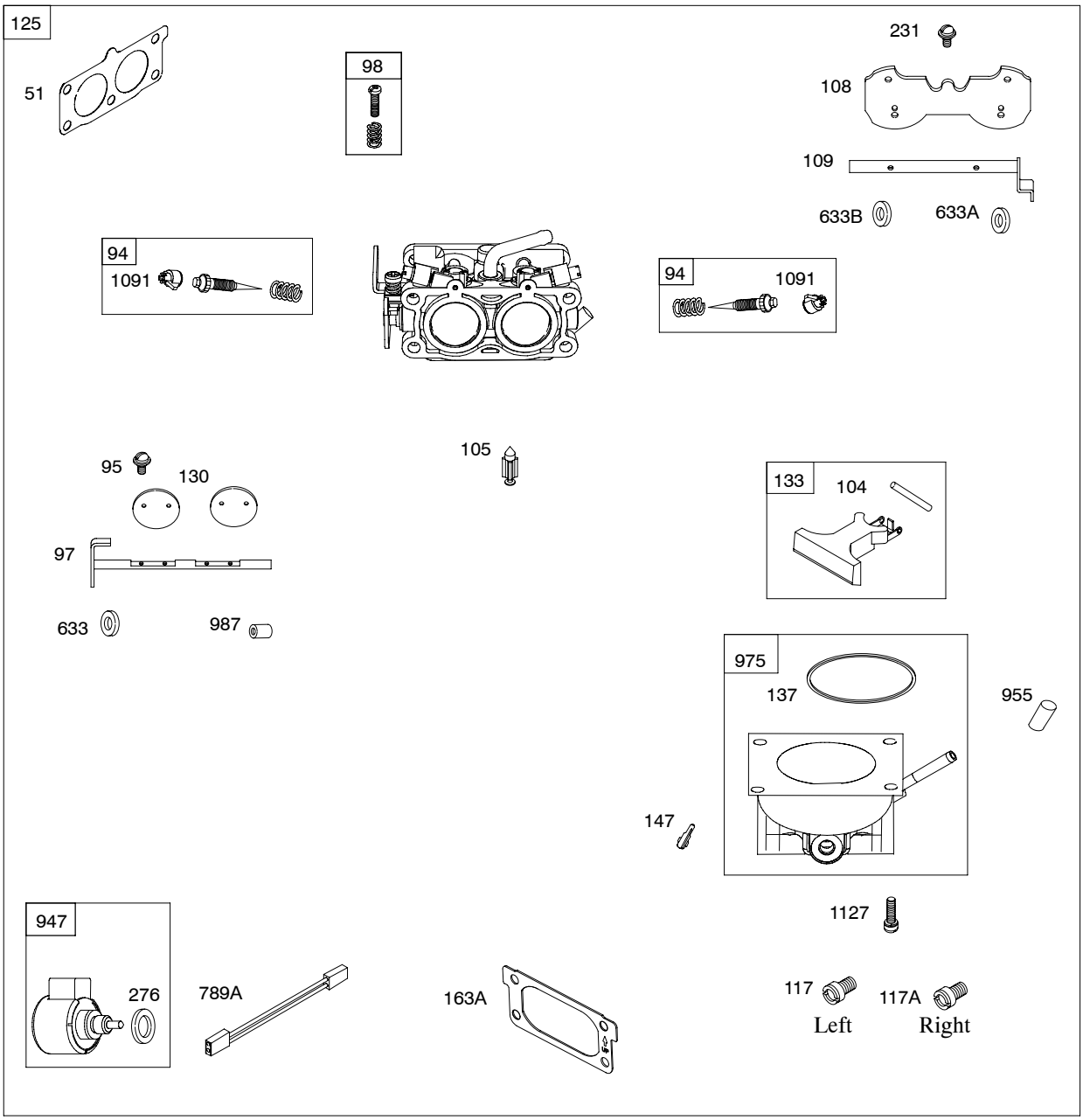
125
51
98
231
108
109
633B
633A
94
1091
94
1091
105
95
130
97
633
987
133
104
975
137
955
147
947
276
789A
163A
1127
117
117A
Left
Right

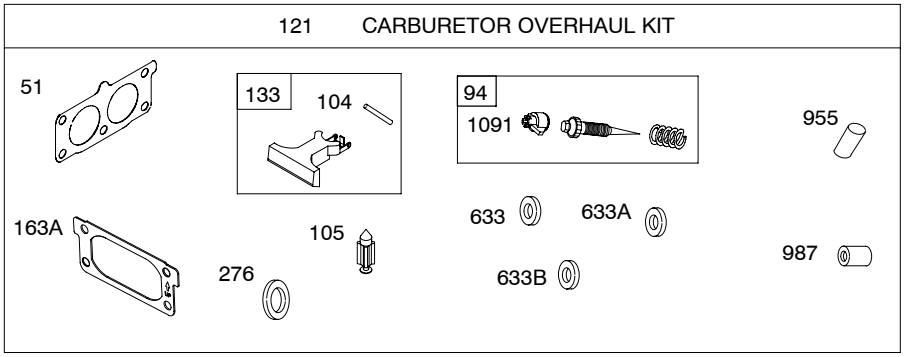
121 CARBURETOR OVERHAUL KIT
51
133
104
94
1091
955
163A
105
633
633A
276
633B
987

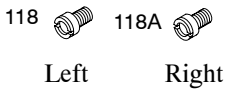
118
118A
Left
Right

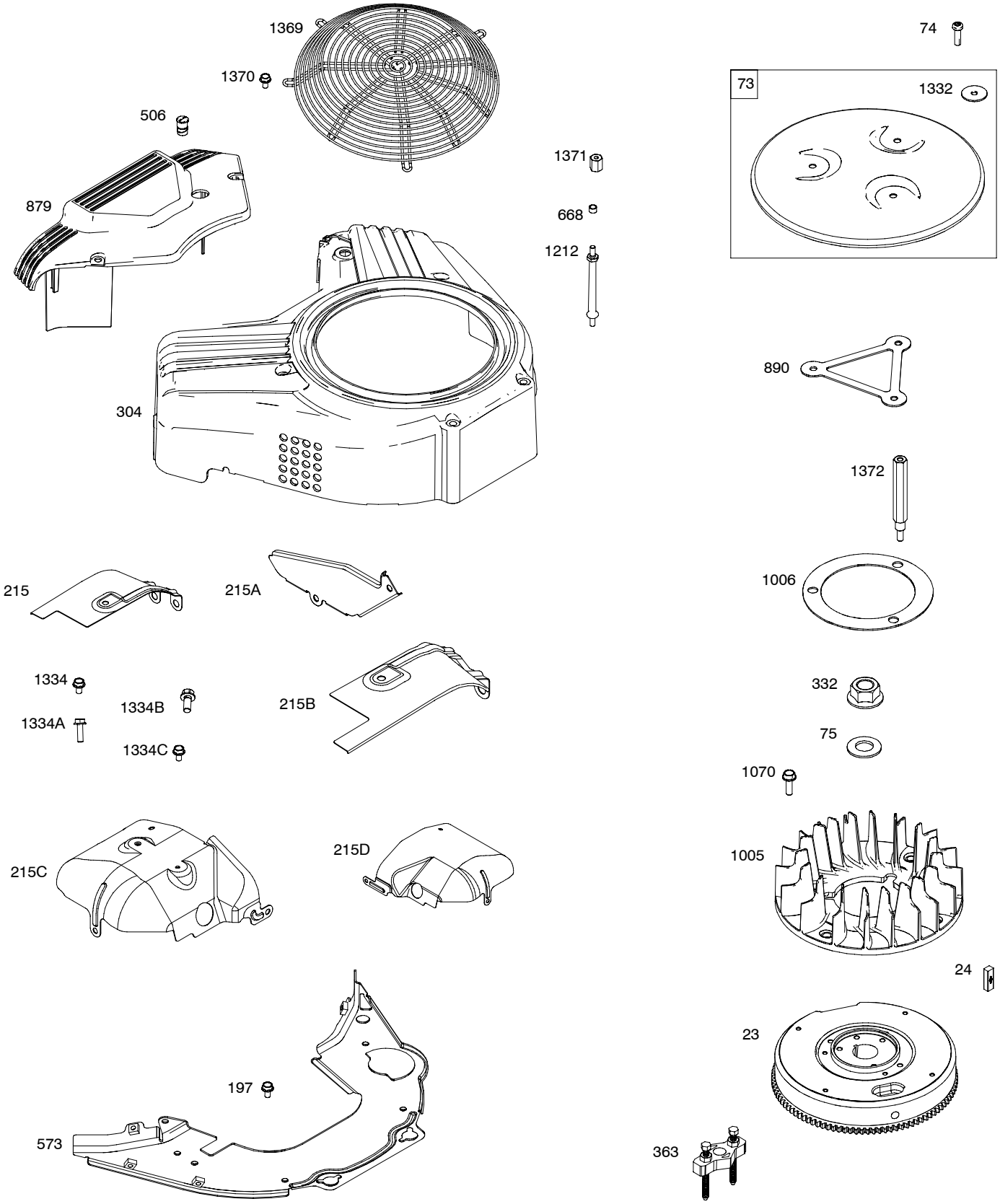
1369
1370
506
879
1371
668
1212
304
74
73
1332
890
1372
1006
215
215A
1334
1334B
1334A
1334C
215B
332
75
1070
1005
215C
215D
24
23
197
573
363

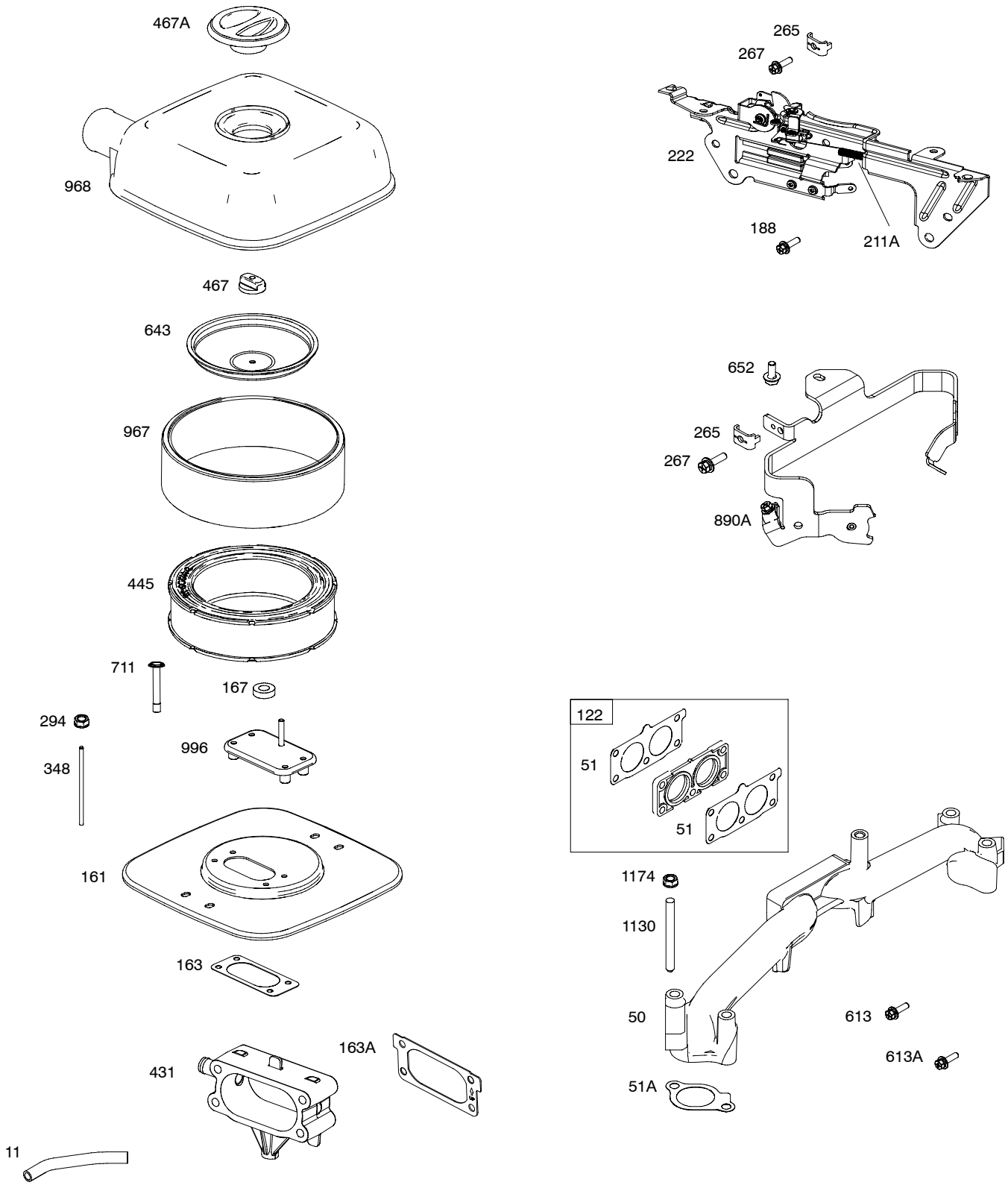
467A
968
467
643
967
445
711
167
294
348
996
161
163
431
163A
11
265
267
222
188
211A
652
265
267
890A
122
51
51
1174
1130
50
613
613A
51A

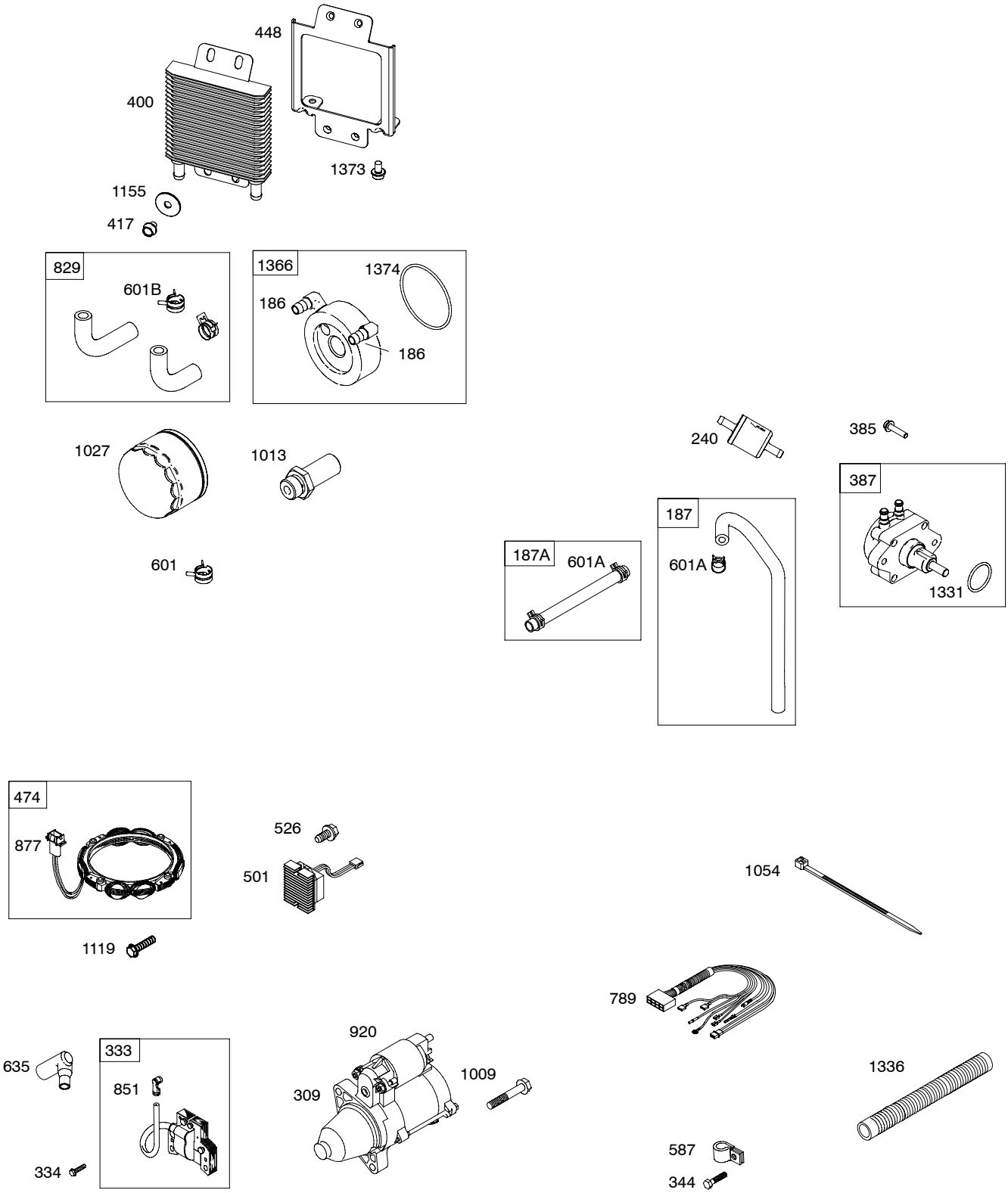
448
400
1373
1155
417
829
601B
1366
1374
186
186
1027
1013
601
240
385
387
1331
187
601A
187A
601A
474
877
526
501
1054
1119
789
920
635
333
851
1009
309
1336
587
334
344

613700

REF. NO.	PART NO.	DESCRIPTION
1	843352	Cylinder Assembly
3	841596	Seal–Oil (Magneto Side)
4	842626	Sump–Engine
5	842180	Head–Cylinder (Clyinder # 1)
		------- **Note** ----- **842181** Head–Cylinder (Cylinder # 2)
7	809730	Gasket–Cylinder Head
9	842545	Gasket–Breather
11	842541	Tube–Breather
12	809727	Gasket–Crankcase
13	809784	Screw (Cylinder Head) (M9x70mm Long)
15	807392	Plug–Oil Drain
16	843354	Crankshaft Used on Type No(s). 0110.
20	841596	Seal–Oil (PTO Side)
21	809895	Cap–Oil Fill
22	807362	Screw (Crankcase Cover/Sump) (M8x50mm Long)
22A	690676	Screw (Crankcase Cover/Sump) (M8x63mm Long)
23	809963	Flywheel
24	222698S	Key–Flywheel
25	841837	Piston Assembly (Standard)
26	809972	Ring Set (Standard)
27	807351	Lock–Piston Pin
28	807361	Pin–Piston
29	841838	Rod–Connecting
32	807363	Screw (Connecting Rod)
33	809901	Valve–Exhaust
34	809902	Valve–Intake
35	809374	Spring–Valve (Intake)
36	809734	Spring–Valve (Exhaust)
40	807492	Retainer–Valve
42	807683	Keeper–Valve
45	809785	Tappet–Valve
46	809879	Camshaft
50	842532	Manifold–Intake
51	841882	Gasket–Intake
51A	841592	Gasket–Intake
73	841840	Screen–Rotating
74	809947	Screw (Rotating Screen)
75	842548	Washer (Flywheel)
94	843295	Kit–Idle Mixture
95	690728	Screw (Throttle Valve)
97	843367	Shaft–Throttle
98	809716	Kit–Idle Speed
104	690739	Pin–Float Hinge
105	843366	Valve–Float Needle
108	841915	Valve–Choke
109	843368	Shaft–Choke
117	843365	Jet–Main (Left Jet)
117A	842103	Jet–Main (Right Jet)
118	843376	Jet–Main (High Altitude) (Left Jet) (5000 Feet)
		------- **Note** ----- **841919** Jet–Main (High Altitude) (Left Jet) (6560 Feet)
118A	843365	Jet–Main (High Altitude) (Right Jet) (5000 Feet)
		------- **Note** ----- **842104** Jet–Main (High Altitude) (Right Jet) (6560 Feet)
121	843378	Kit–Carburetor Overhaul
122	843268	Spacer–Carburetor
125	843363	Carburetor
130	841913	Valve–Throttle
133	809637	Float–Carburetor
137	809645	Gasket–Float Bowl
146	691639	Key–Timing
147	843375	Jet–Pilot
161	843118	Base–Air Cleaner
163	843117	Gasket–Air Cleaner (Air Cleaner Side)
163A	807375	Gasket–Air Cleaner (Carburetor Side)
167	841855	Seal–Air Cleaner Nut
186	841511	Connector–Hose (Oil Diverter)
187	842527	Line–Fuel (Formed Hose)
187A	791745	Line–Fuel (Cut to Required Length)
188	692062	Screw (Control Bracket)
192	690083	Adjuster–Rocker Arm
202	842533	Link–Mechanical Governor
209	842614	Spring–Governor (Orange) Used on Type No(s). 0110.
211	809875	Spring–Governed Idle
211A	690707	Spring–Governed Idle (Control Bracket)
215	809728	Guide–Air (Cylinder #1)
215A	809739	Guide–Air
215B	809737	Guide–Air (Cylinder #2)
215C	809738	Guide–Air (Cylinder #1)
215D	809897	Guide–Air (Cylinder #2)
219	809426	Gear–Governor
220	841608	Washer (Governor Gear)
221	841026	Cup–Governor
222	841527	Bracket–Control
227	809984	Lever–Governor Control
231	690728	Screw (Choke Valve)
232	843248	Spring–Governor Link
240	695666	Filter–Fuel
265	691024	Clamp–Casing
267	841552	Screw (Casing Clamp)
276	806476	Washer–Sealing (Fuel Solenoid)
278	842122	Washer (Governor Control Lever)
294	690939	Nut (Carburetor Shield)
304	841542	Housing–Blower
309	807383	Motor–Starter (0.8KW)
332	842222	Nut (Flywheel)
333	843327	Armature–Magneto
334	692066	Screw (Magneto Armature)
337	491055S	Plug–Spark

REF. NO.	PART NO.	DESCRIPTION
344	841233	Screw (Cable Clamp)
348	843360	Stud (Carburetor Shield)
358	843370	Gasket Set–Engine
363	19203	Puller–Flywheel
383	19374S	Wrench–Spark Plug
385	809876	Screw (Fuel Pump)
387	842920	Pump–Fuel
400	841501	Cooler–Oil
404	809436	Washer (Governor Crank)
415	690283	Plug (Oil Pressure Switch)
417	843345	Screw (Oil Cooler)
431	843362	Elbow–Intake
439	692154	Seal–O Ring (Crankcase Cover/Sump) (Cylinder) (Oil Gallery)
445	692519	Filter–Air Cleaner Cartridge
448	842857	Bracket–Oil Cooler
467	691985	Knob–Air Cleaner
467A	841846	Knob–Air Cleaner
474	696579	Alternator (20 AMP)
501	691573	Regulator (20 AMP)
505	690238	Nut (Governor Control Lever)
506	809957	Screw (Carburetor Cover)
523	842542	Dipstick
526	691547	Screw (Regulator)
562	843344	Bolt (Governor Control Lever)
573	809956	Plate–Back
580	809894	Seal–O Ring (Oil Fill Cap)
587	807386	Clamp–Cable
596	807385	Screw (Oil Pump)
601	841499	Clamp–Hose
601A	691038	Clamp–Hose
601B	841597	Clamp–Hose (Oil Hose)
613	692062	Screw (Muffler) (M8x18mm)
613A	809743	Screw (Muffler) (M8x25mm)
615	698290	Retainer–Governor Shaft (Governor Gear)
615A	809533	Retainer–Governor Shaft (Governor Crank)
616	842665	Crank–Governor
633	809641	Seal–Choke/Throttle Shaft
633A	809638	Seal–Choke/Throttle Shaft (Choke Shaft)
633B	809644	Seal–Choke/Throttle Shaft (Choke Shaft)
635	692076	Boot–Spark Plug
652	807084	Screw (Support Bracket)
643	841850	Retainer–Air Filter
668	841974	Spacer (Blower Housing)
691	809287	Seal–Governor Shaft
711	843361	Screw (Carburetor Shield)
718	690959	Pin–Locating (Cylinder)
718A	809508	Pin–Locating (Cylinder Head)
741	809432	Gear–Timing
750	842537	Screw (Oil Pump Cover)
789	843353	Harness–Wiring
789A	843364	Harness–Wiring (Fuel Solenoid)
798	691492	Screw (Rocker Arm)
806	807362	Screw (Lifting Bracket) (M8x50mm Long)
806A	807357	Screw (Lifting Bracket) (M6x40mm Long)
829	841503	Hose–Oil (Oil Cooler)
851	493880S	Terminal–Spark Plug
868	691963	Seal–Valve
871	692057	Bushing–Valve Guide
877	698092	Wire–Connector/Alternator
879	842526	Cover–Carburetor
883	809872	Gasket–Exhaust
890	809987	Bracket–Support
890A	843358	Bracket–Support
914	807357	Screw (Rocker Cover) (M6x40mm Long)
920	825418	Solenoid–Starter
943	842538	Seal–O Ring (Oil Pump Cover)
947	842109	Solenoid–Fuel
955	809640	Plug–Carburetor
965	842536	Cover–Oil Pump
967	692520	Filter–Pre Cleaner
968	841847	Cover–Air Cleaner
975	842106	Bowl–Float
987	809639	Seal–Throttle Shaft
996	843119	Shield–Carburetor
1005	809950	Fan–Flywheel
1006	809999	Fan–Retainer
1009	690711	Screw (Starter Motor)
1013	841602	Nipple–Oil Filter
1017	842535	Screen–Oil Pump
1022	809732	Gasket–Rocker Cover
1023	842540	Cover–Rocker (#2)
1023A	842543	Cover–Rocker (#1)
1024	842539	Pump–Oil
1026	809783	Rod–Push
1027	842921	Filter–Oil
1029	807323	Arm–Rocker
1036		Label–Emissions (Available from Authorized Briggs & Stratton Service Dealer)
1054	280275	Tie–Cable
1058	276354	Operator's Manual
1070	807435	Screw (Flywheel Fan)
1077	809729	Bracket–Lifting
1077A	842616	Bracket–Lifting
1091	691515	Cap–Limiter
1095	841123	Gasket Set–Valve
1100	791959	Pivot–Rocker Arm
1119	691552	Screw (Alternator)
1127	809715	Screw (Float Bowl)

613700

REF. NO.	PART NO.	DESCRIPTION
1130	**841590**	Stud (Intake Manifold)
1155	**806647**	Washer (Oil Cooler)
1174	**842067**	Nut (Intake Manifold)
1212	**809958**	Stud (Blower Housing)
1263	**842544**	Reed–Breather
1331	**809894**	Seal–O Ring (Fuel Pump)
1332	**809948**	Washer (Rotating Screen)
1334	**690677**	Screw (Air Guide) (M8x12mm Long)
1334A	**692062**	Screw (Air Guide) (M8x18mm Long)
1334B	**807084**	Screw (Air Guide) (M6x14mm Long)
1334C	**841233**	Screw (Air Guide) (M6x10mm Long)
1336	**841015**	Shield–Wire Protective
1366	**841510**	Diverter–Oil Cooler
1369	**842858**	Guard–Flywheel Fan
1370	**841233**	Screw (Flywheel Fan Guard)
1371	**841537**	Nut (Flywheel Fan Guard)
1372	**809946**	Stud (Rotating Screen)
1373	**841233**	Screw (Oil Cooler Bracket)
1374	**841506**	Seal–O Ring (Oil Cooler Diverter)
1375	**842546**	Cover–Breather Reed
1376	**842547**	Screw (Breather/Reed Cover)
1405	**690941**	Nut (Lifting Bracket)